EURO
TILE & STONE

Commercial Order Desk:
P 613 244 3773
F 613 244 8553
E order@eurotilestone.com

General Inquiries:
P 613 244 4315
F 613 244 4320
E info@eurotilestone.com

3103 Hawthorne Rd | Ottawa, Ontario K1G 3V8

Connect with us on:

http://eurotilestone.com/

HYDRA
60 x 43 CM

HYDRA SENDA GRIS NATURAL

HYDRA SENDA GRIS NATURAL

Larsen Super Blanco-Gris Natural

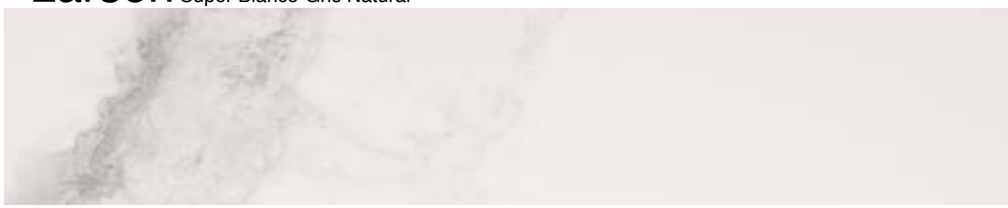

Petra Crema Abujardado

Silk Camel Natural

Senda Gris Natural

Storm Negro Natural

* Grifo no incluido / Tap not included

HYDRA MODEL DIMENSIONS 60 x 43 cm

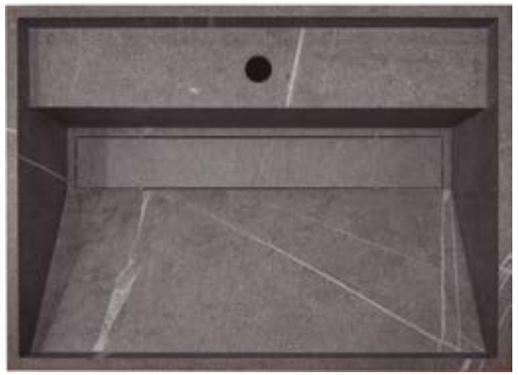

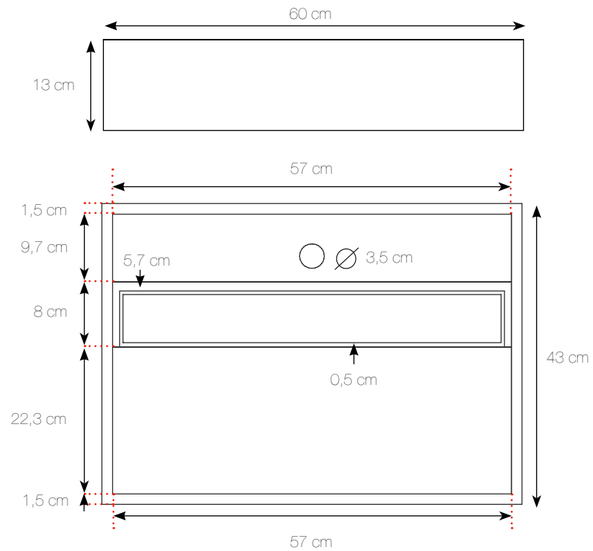

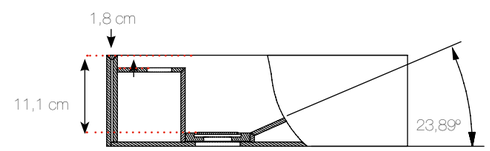

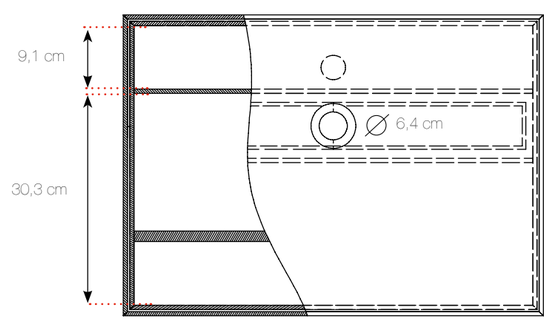

Model also available without hole for tap installation on wall.

*Each sink is delivered with a piece to cover the drain and with a trap

HYDRA MODEL PACKAGING 60 x 43 cm

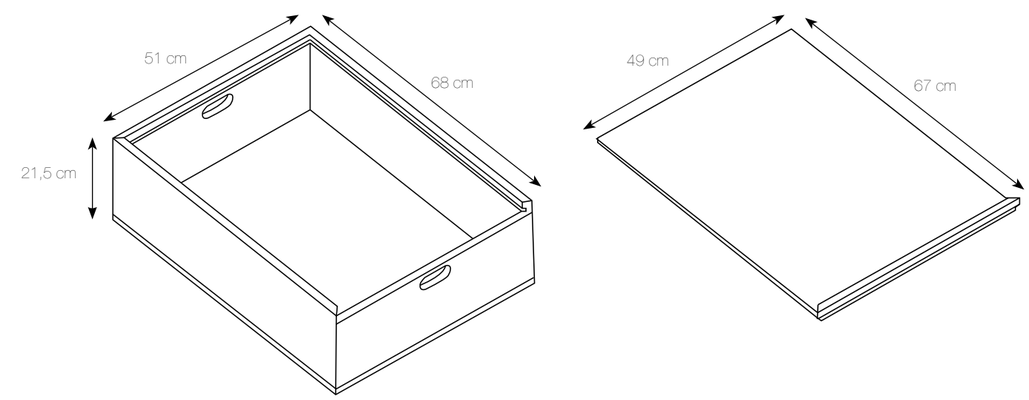

Peso lavabo Basin weight	Peso lavabo con embalaje Basin and packaging weight
13,5 kg	23,5 kg

HYDRA
117 x 43 CM

Inalco Basins: HYDRA SENDA GRIS NATURAL

Inalco Basins: HYDRA SENDA GRIS NATURAL

Larsen Super Blanco-Gris Natural

Petra Crema Abujardado

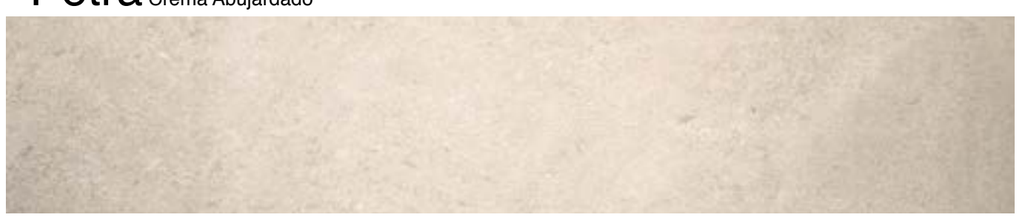

Silk Camel Natural

Senda Gris Natural

Storm Negro Natural

HYDRA MODEL AVAILABLE FINISHINGS 117 x 43 cm

* Tap not included

HYDRA MODEL DIMENSIONS 117 x 43 cm

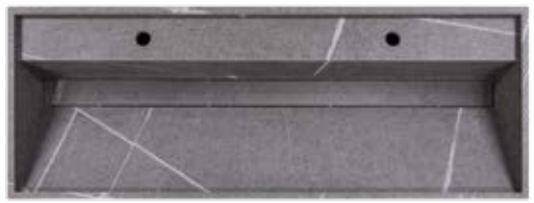

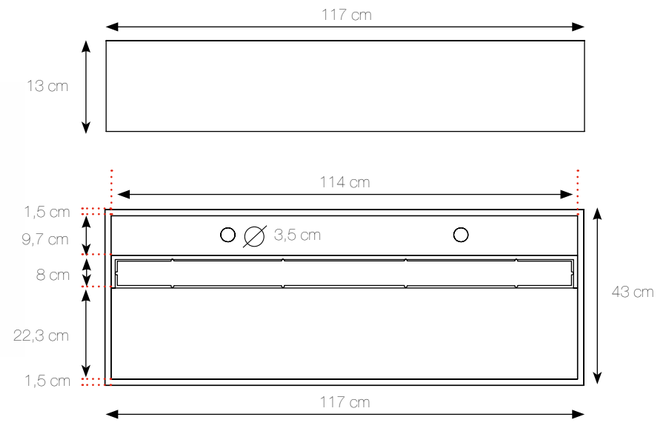

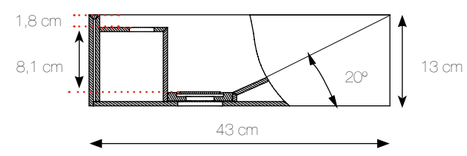

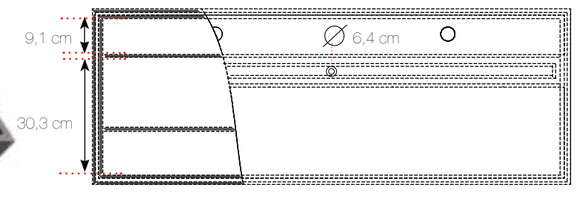

Model also available without hole for tap installation on wall.

* Each sink is delivered with a piece to cover the drain and with a trap
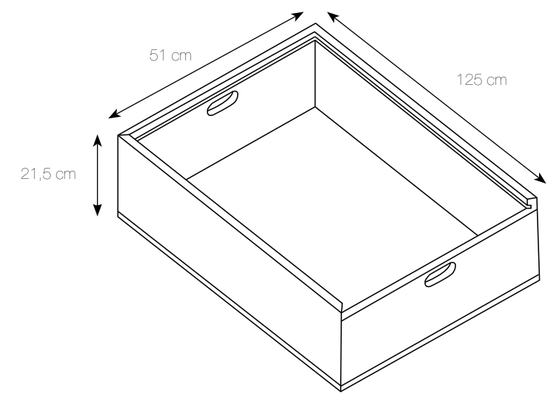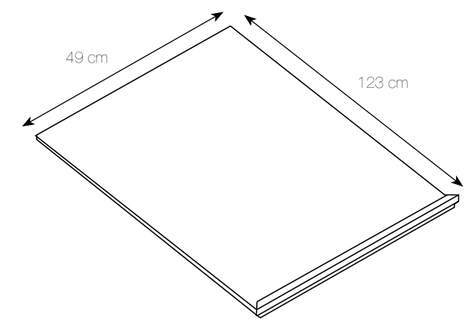
HYDRA MODEL PACKAGING 117 x 43 cm